## Exercise 1

The following circuit describes a membrane electric analog: i is the input current, g is an electric conductance, C is an electrical capacity, V is tension across the membrane, and $E_0$ is the equilibrium potential.

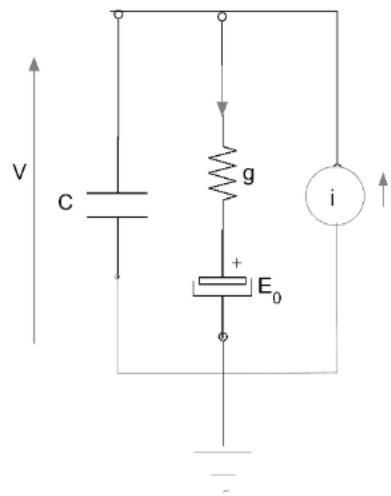


1) ) Write the differential equation of the system.

2) Write the analytical solution imagining that the input current is constant (avoid using “for” loops, but use the vector form).

3) Solve the system with Euler's method, assuming $E_0$ = - 65 mV; □ = 30ms; r = 1/g = 10 M□□□i□□□□□n□, and compare the solution with the analytical one (choose any initial state).

4) Try the numerical solution with a very high integration step and see what happens.

5) Simulate the numerical solution with a sinusoidal current input and a frequency equal to 10 Hz.

6) What does it happen when the frequency varies?

The circuit represents a first-order electrical model of the cell membrane. The capacitor models the membrane capacitance, the resistor models the membrane conductance, the current source is the input current, and E0 is the equilibrium potential. By applying Kirchhoff's current law, the membrane dynamics can be written as:

$$\mathbf{C \cdot dV/dt = -g \cdot (V - E0) + i}$$

Using the relations $r = 1/g$ and $\tau = rC$, the equation becomes:

$$\mathbf{dV/dt = (1/\tau) \cdot (-V + E0 + r \cdot i)}$$

For a constant input current, the steady-state voltage is:

$$\mathbf{V\infty = E0 + r \cdot i}$$

and the analytical solution is:

$$\mathbf{V(t) = (V0 - V\infty) \cdot exp(-t/\tau) + V\infty}$$

With the assigned values E0 = -65 mV, r = 10 MΩ, τ = 30 ms, i = 4 nA, and V0 = -50 mV, the steady-state value is V∞ = -25 mV. Therefore, the membrane voltage starts from -50 mV and exponentially approaches -25 mV.

The system is also solved numerically using Euler's method, with the update equation:

$$\mathbf{V(k+1) = V(k) + \Delta t \cdot (1/\tau) \cdot (-V(k) + V\infty)}$$

Using a small integration step, $\Delta t = 0.1$ ms, the numerical solution is almost identical to the analytical one. This confirms that Euler's method is accurate when the integration step is sufficiently small. In fact, the MATLAB plot shows that the theoretical and numerical curves almost perfectly overlap.

If the integration step is chosen too large, the numerical approximation becomes inaccurate. The solution may show artificial oscillations or even diverge, even if the real physical system is stable. This happens because Euler's method loses accuracy and stability when the time discretization is too coarse compared with the membrane time constant.

The exercise also considers a sinusoidal input current of the form $i(t) = 4 \cdot \cos(2\pi ft)$, with f = 10 Hz. In this case, after an initial transient, the membrane voltage oscillates periodically around the equilibrium value. However, the membrane does not follow the input perfectly, because it behaves as a first-order low-pass filter.

When the input frequency changes, the response of the membrane changes as well. At low frequencies, the voltage follows the input more closely, with larger amplitude and smaller phase delay. At high frequencies, the voltage oscillation becomes more attenuated and more delayed.

This means that the membrane filters out fast variations of the input current. The cutoff frequency of the model is $f_c = 1/(2\pi\tau) \approx 5.3$ Hz.
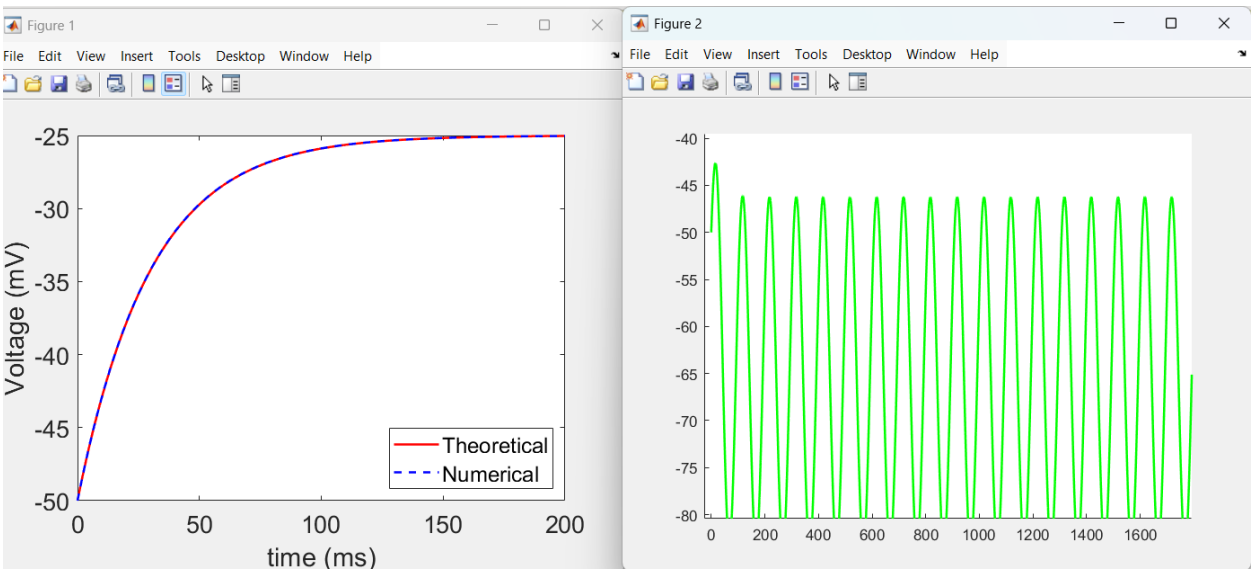
Since the applied sinusoidal input has frequency 10 Hz, which is higher than the cutoff frequency, the output is already attenuated. In conclusion, this exercise shows that the membrane can be modeled as a first-order RC system. With constant current, the voltage approaches a steady-state value exponentially. With sinusoidal current, the membrane behaves like a low-pass filter. The comparison between analytical and numerical results also highlights the importance of choosing a sufficiently small integration step.